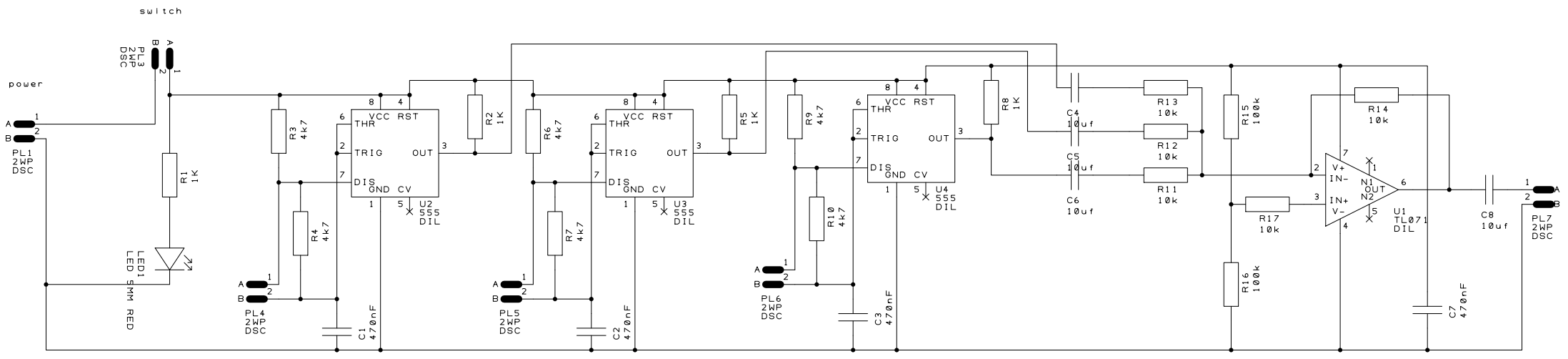
switch
PL3
2WP
DSC
power
PL1
2WP
DSC
R1
1K
LED1
5MM RED
R3
4k7
R4
4k7
PL4
2WP
DSC
U2
555
DIL
C1
470nF
R2
1K
R6
4k7
R7
4k7
PL5
2WP
DSC
U3
555
DIL
C2
470nF
R5
1K
R9
4k7
R10
4k7
PL6
2WP
DSC
U4
555
DIL
C3
470nF
R8
1K
C4
10uf
C5
10uf
C6
10uf
R13
10k
R12
10k
R11
10k
R15
100k
R16
100k
R17
10k
R14
10k
U1
TL071
DIL
C7
470nF
C8
10uf
PL7
2WP
DSC
VCC
RST
THR
TRIG
OUT
DIS
GND
CV
V+
IN-
IN+
V-
N1
N2